IW-5900-7C-BLK-12

Inside Window Mount
DSRC 5.85-5.93 GHz

(PREVIOUSLY EDN137–1650)

DSRC PATCH ANTENNA DESIGN FOR MOUNTING ON THE INSIDE OF A VEHICLE WINDSHIELD. THE UNIQUE RADOME DESIGN PROVIDE INTERNAL ELEMENT TILT TO COMPENSATE FOR THE TILT ANGLE OF THE WINDSHIELD.

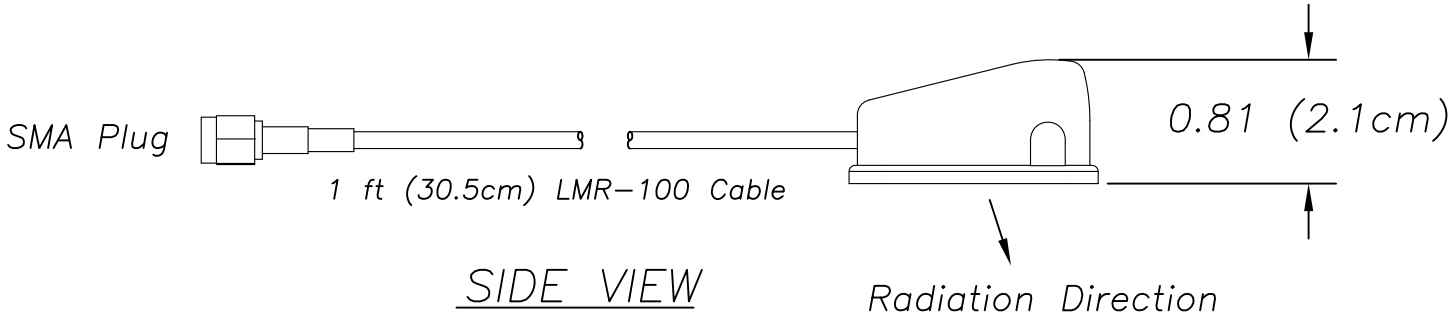

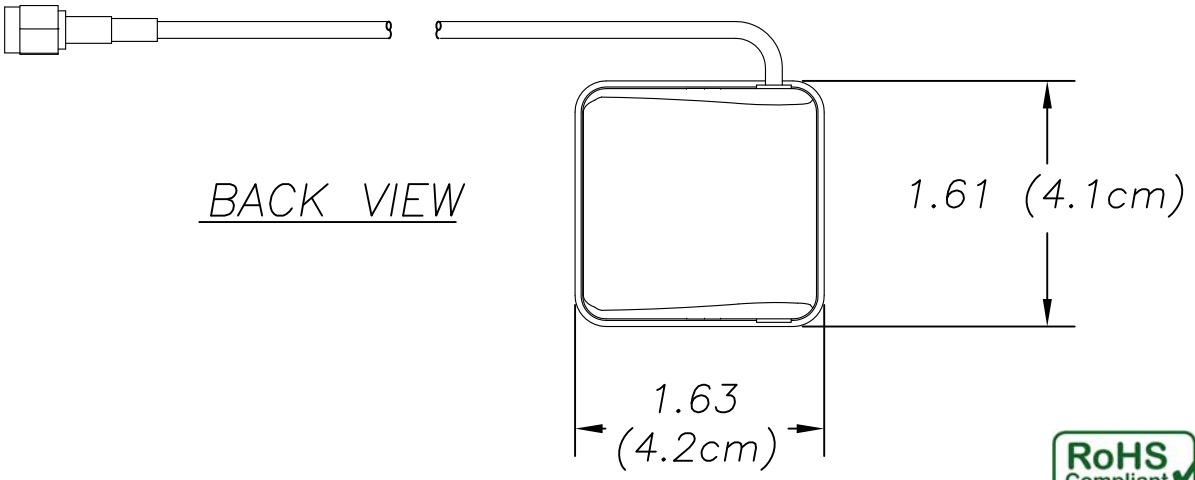

RoHS Compliant

Antenna Specifications

Frequency:	5.85–5.93 GHz (DSRC)
Gain:	6 dBi (DSRC)
VSWR	2:1
Connector:	vary per customer
Cable:	LMR–100, 1 ft long (DSRC) (30.5cm) long
Radome Mat'l:	Black ASA Plastic
Mounting:	VHB Double Sided Tape
Max. Power:	10 Watts

JP	3/17/16	A

MobileMark
antenna solutions

US OFFICE & HEADQUARTERS: 1140 W THORNDALE AVE, ITASCA, IL 60143
TEL: (847) 671-6690 * FAX (847) 250-5120

UK OFFICE: 8 MIRAS BUS PARK, KEYS PARK ROAD. HEDNESFORD WS12 2FS, UK.
UK TEL: (+44) 1543-459555 FAX (+44) 1543-459545

VISIT OUR WEBSITE AT WWW.MOBILEMARK.COM